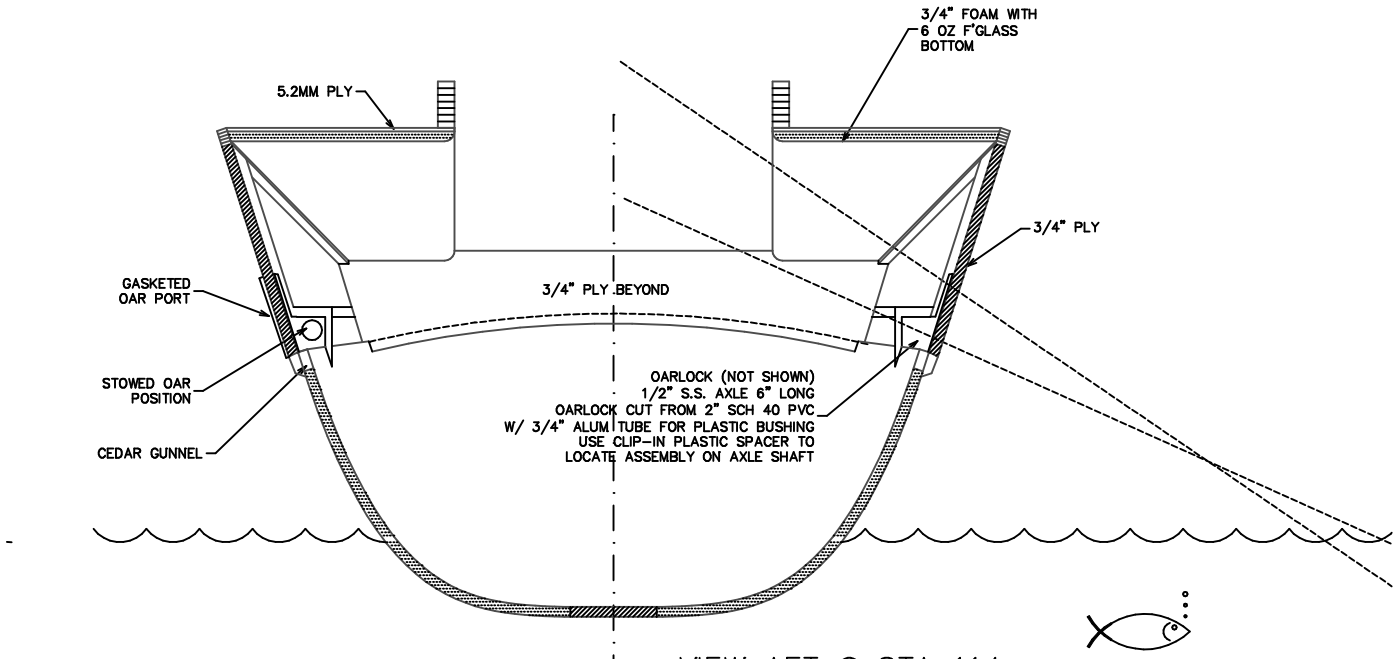


VIEW AFT @ STA 114

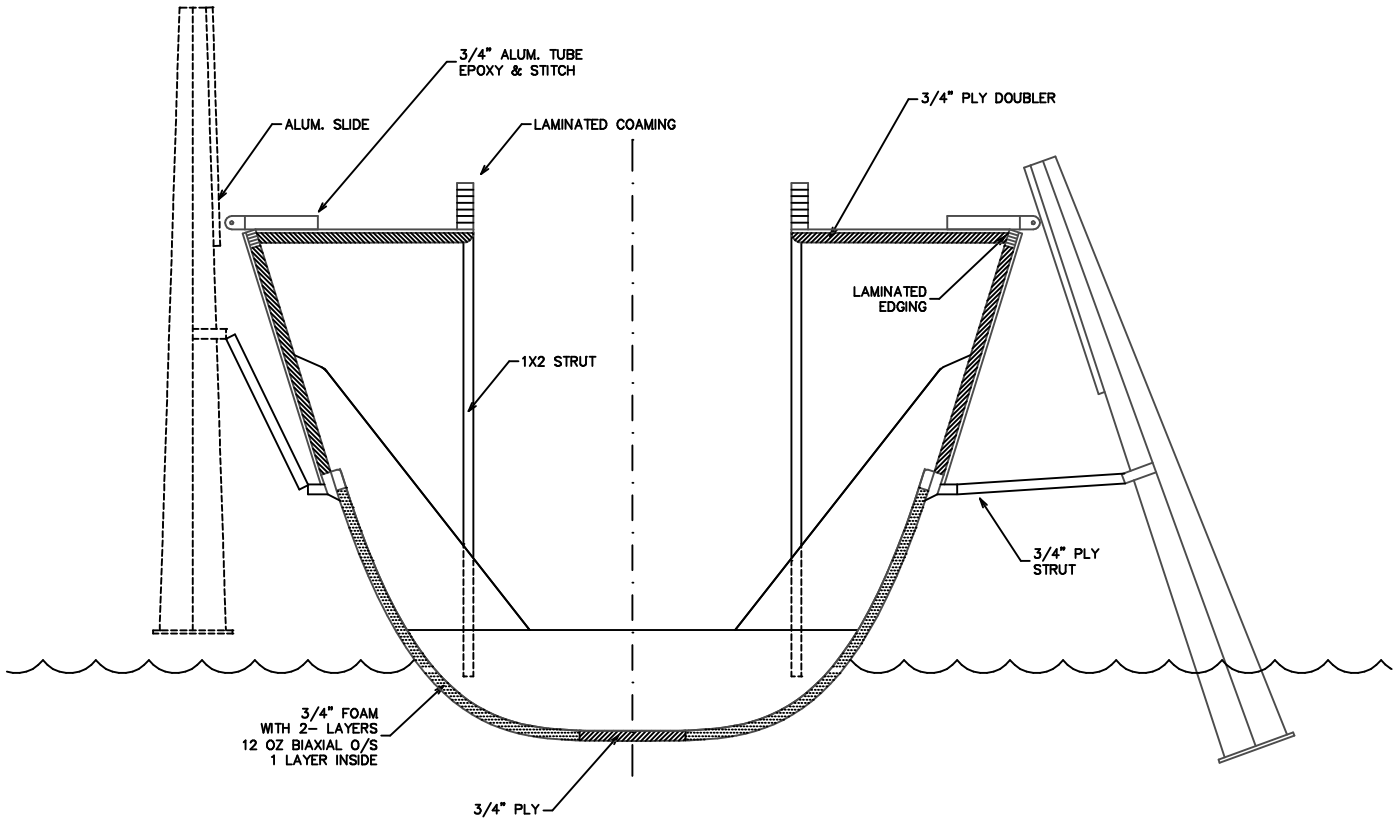


BULKHEAD @ STA 66

# Brendans Chariot – BC15

copyright 2005 Milton "Skip"Johnson